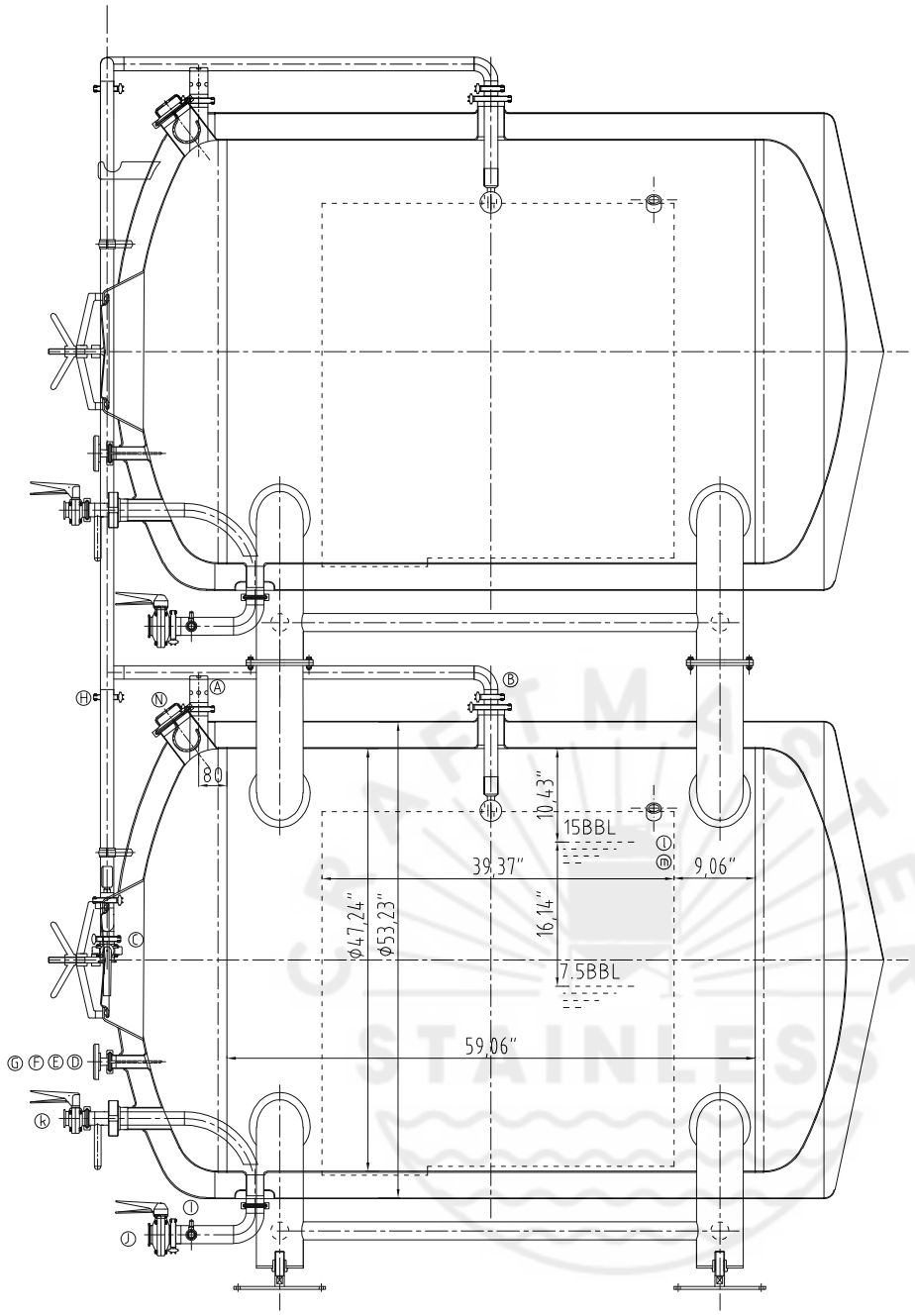

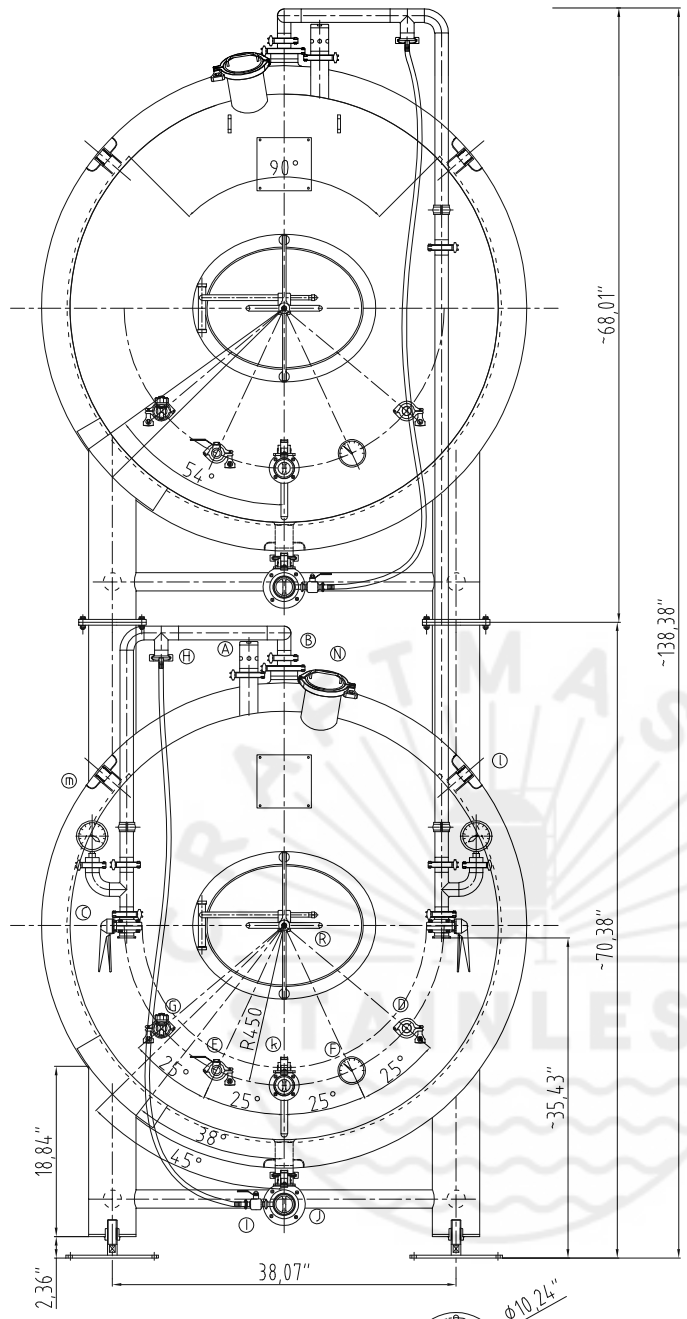

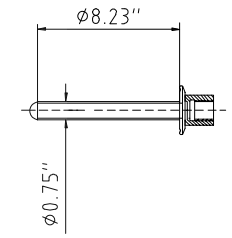

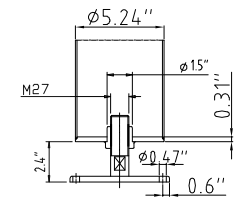

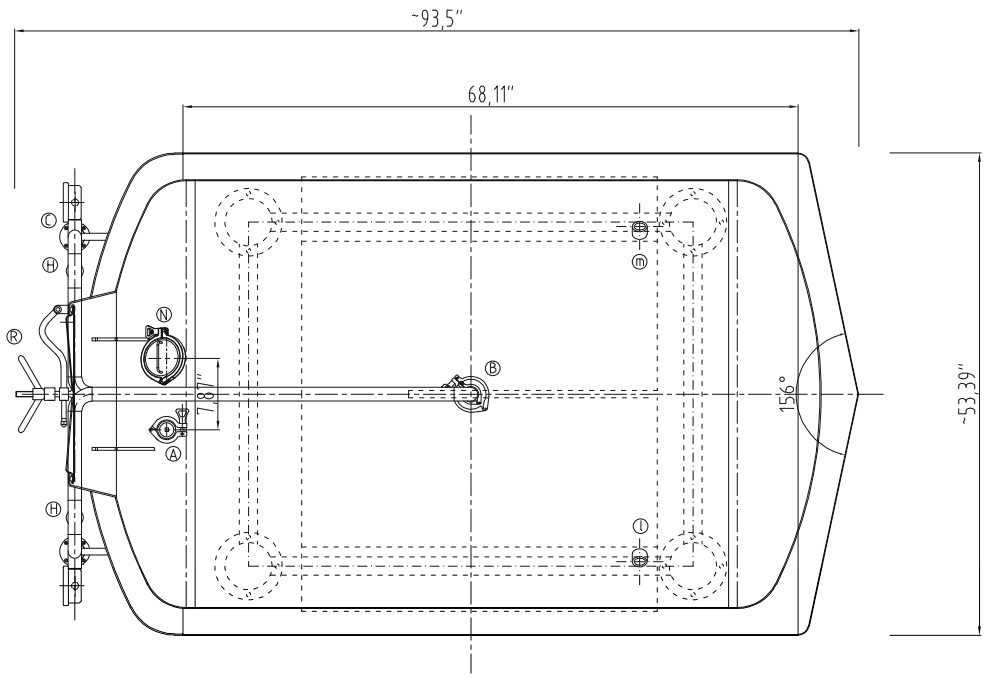

Design data

Vessel category	Normal pressure	
Description of parameter	Vessel	Jacket
Working pressure psi	22	45
Design pressure psi	22	45
Level testing pressure psi	45	60
Medium	Beer	Glycol
Material	SUS 304	SUS 304
Working temperature °F	15 to 100	
Design temperature °F	15 to 100	
Gross volume BBL	17.8	
Net volume BBL	15	
Heat exchanger area m2	2.8	
Glycol Jacket Max Volume Gallon	3.9	
Insulation material	Chloride Free Polyurethane	
Insulation thickness mm	80	
Total Tank Weight Empty lbs	2455	
Total Tank Weight Full lbs	10215	

CONNECTIONS

MARK	DN	DESCRIPTION	CONNECT SIZE	REMARKS
A	2"	PVRV FERRULE	2"	ISO
B	3"	PORT	3"	ISO
C	1.5"	CIP APM FERRULE	1.5"	ISO
D	1.5"	TEMPERATURE CONN	1.5"	ISO
E	1.5"	CO2 INLET	1.5"	ISO
F	1.5"	TEM-GAGE	1.5"	ISO
G	1.5"	SAMPLE FERRULE	1.5"	ISO
H	1.5"	DIAIN ARM COUPLING	1.5"	ISO
I	3/4"	DIAIN ARM COUPLING	3/4"	ISO
J	2"	OUTLET	2"	ISO
k	DIN63~1.5"	DRAIN FERRULE	DIN63~1.5"	ISO
l	3/4"	COOLING OUTLET	3/4"	NPT
m	3/4"	COOLING INLET	3/4"	NPT
N	4"	HOP PORT	4"	ISO
R	21"×17"	MANWAY	21"×17"	ISO

CRAFTMASTER STAINLESS

06/19/2023

15BBL LAGERING TANK